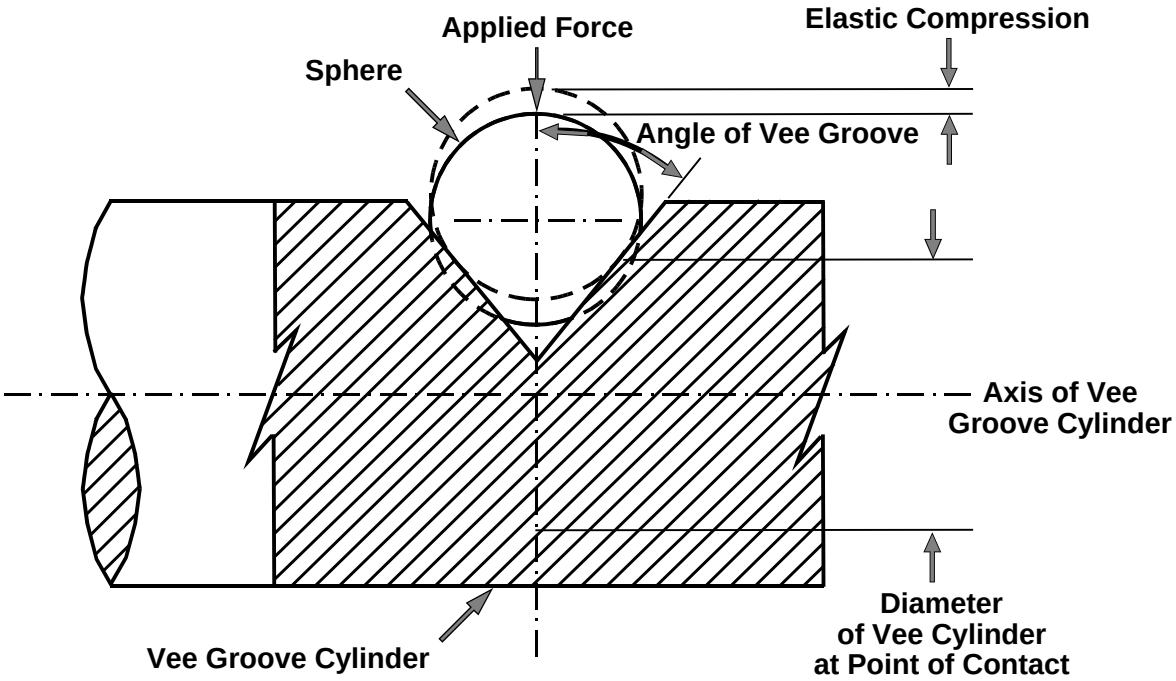
Applied Force
Elastic Compression
Sphere
Angle of Vee Groove
Axis of Vee
Groove Cylinder
Diameter
of Vee Cylinder
at Point of Contact
Vee Groove Cylinder