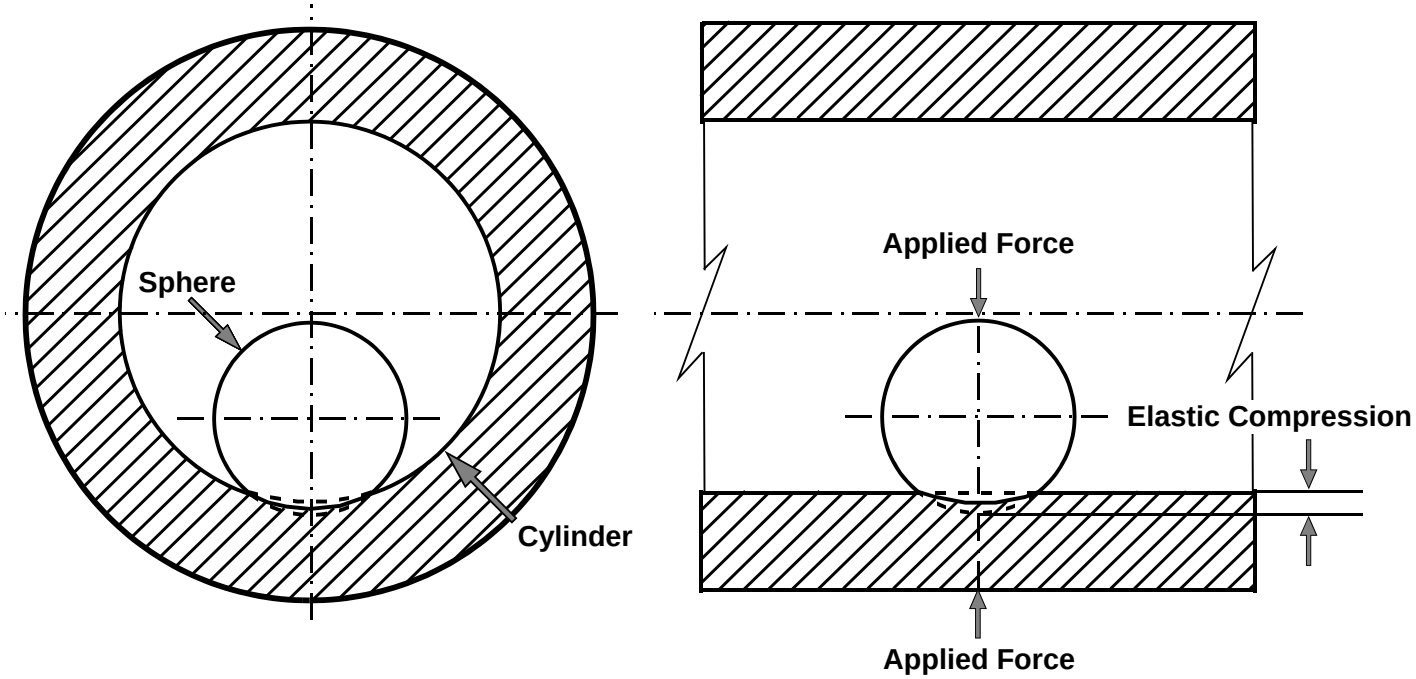
Sphere
Cylinder
Applied Force
Elastic Compression
Applied Force